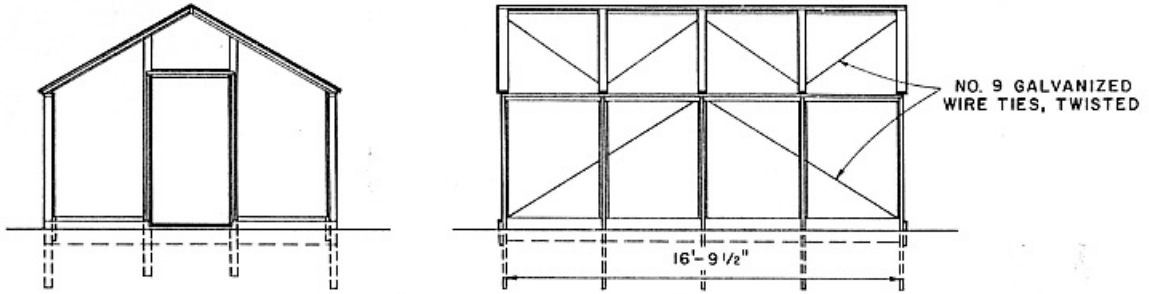

FRAMING ELEVATIONS

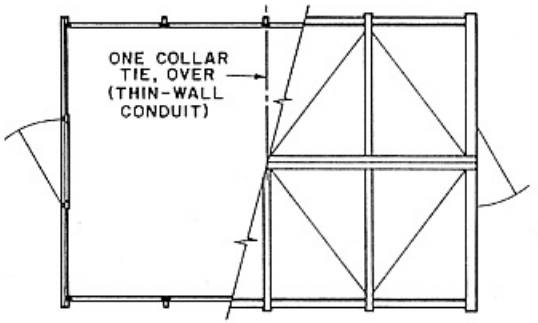

FRAMING PLAN

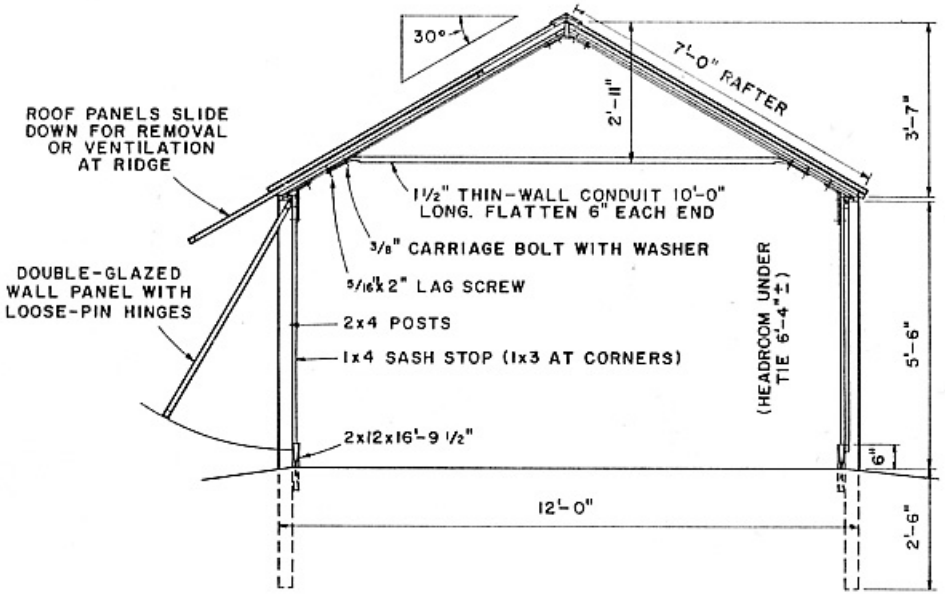

CROSS SECTION

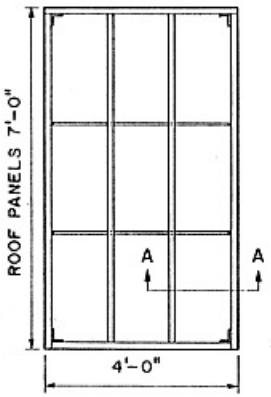

ROOF SASH PANEL

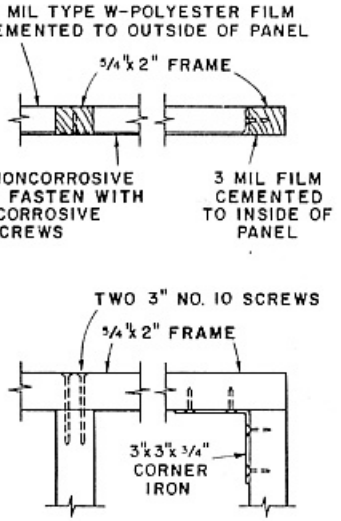

SECTION A-A
NOT TO SCALE

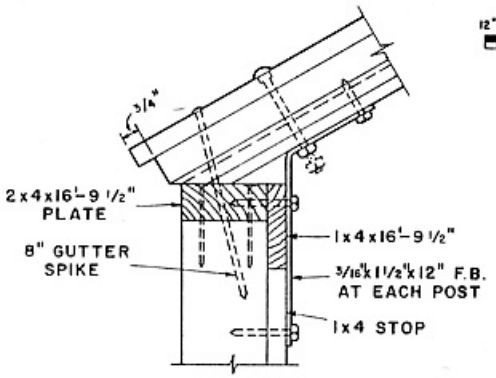

EAVE CONNECTIONS

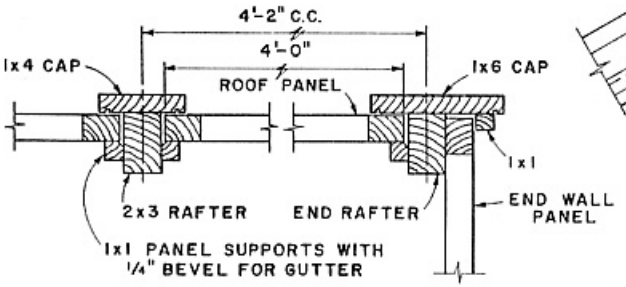

RAFTER DETAILS

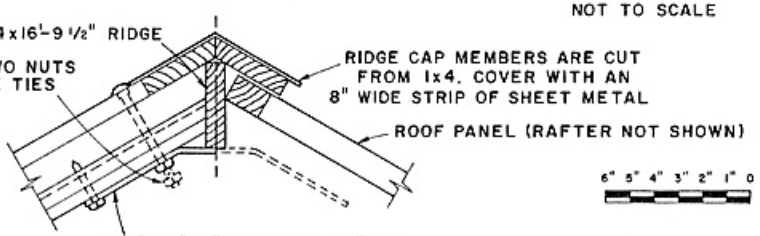

RIDGE DETAIL

NOTE:
CONSULT LOCAL HEALTH AND BUILDING CODE AUTHORITIES BEFORE STARTING CONSTRUCTION.

COOPERATIVE EXTENSION WORK IN AGRICULTURE AND HOME ECONOMICS
STATE OF TENNESSEE
UNIVERSITY OF TENNESSEE
AGRICULTURAL ENGINEERING DEPARTMENT AND UNITED STATES DEPARTMENT OF AGRICULTURE COOPERATING

PLASTIC GREENHOUSE

USDA '76	6251	SHEET 1 OF 2