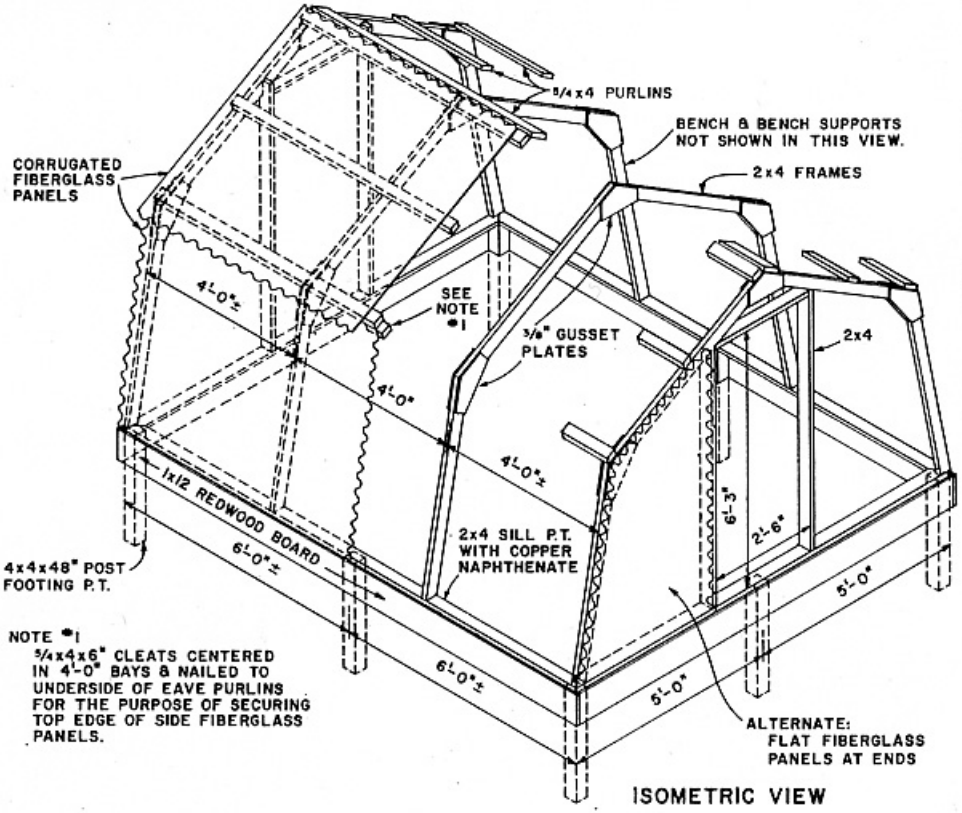

NOTE #1
5/4x4x6" CLEATS CENTERED IN 4'-0" BAYS & NAILED TO UNDERSIDE OF EAVE PURLINS FOR THE PURPOSE OF SECURING TOP EDGE OF SIDE FIBERGLASS PANELS.

ISOMETRIC VIEW

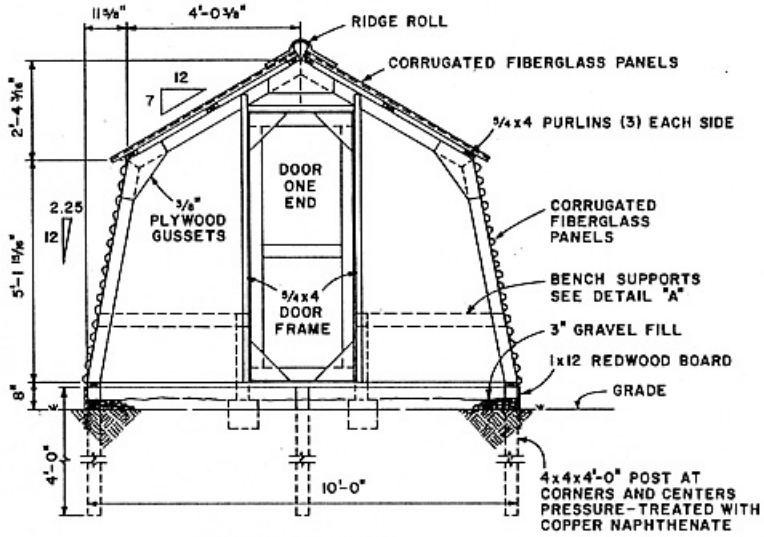

CROSS SECTION
SCALE: 1/2"=1'-0"

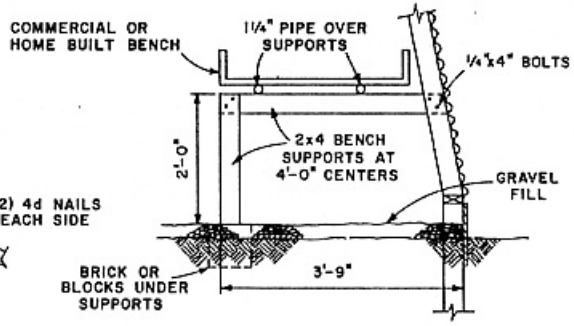

DETAIL "A"
SCALE: 3/4"=1'-0"

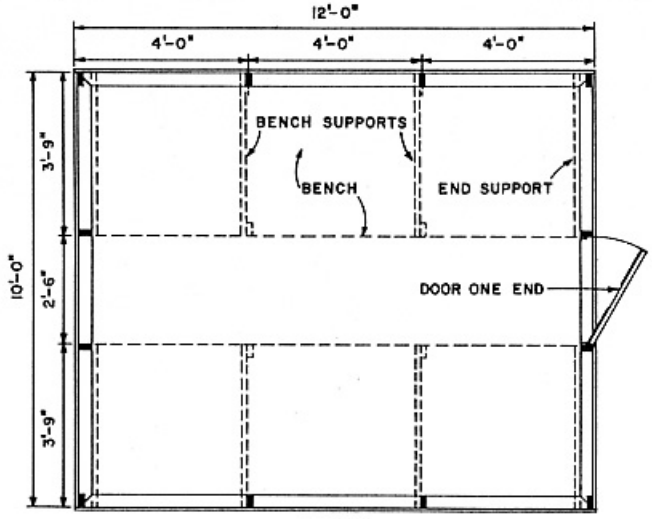

PLAN
SCALE: 1/2"=1'-0"

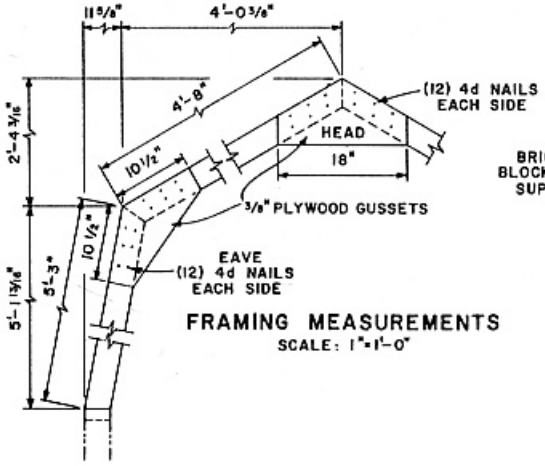

FRAMING MEASUREMENTS
SCALE: 1"=1'-0"

REVISED APRIL 1975

BASED ON: UNIV. OF ILL. CIR. 880 & RUTGERS PLAN NO. 158

COOPERATIVE EXTENSION WORK IN AGRICULTURE AND HOME ECONOMICS
STATE OF TENNESSEE
UNIVERSITY OF TENNESSEE
AND
UNITED STATES DEPARTMENT OF AGRICULTURE COOPERATING

HOME GREENHOUSE

N.J. '74	6181	SHEET 1 OF 2

AGRICULTURAL ENGINEERING DEPARTMENT